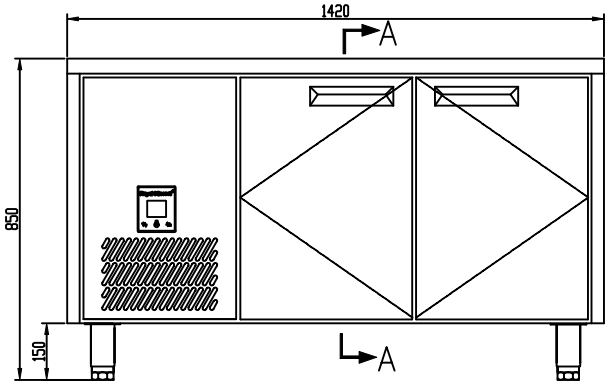

ELEVATION
???

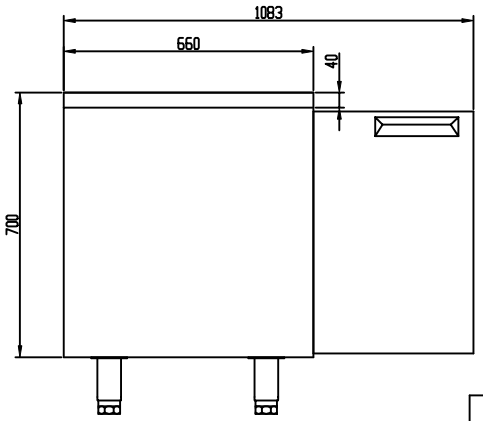

SIDE VIEW
????

A–A

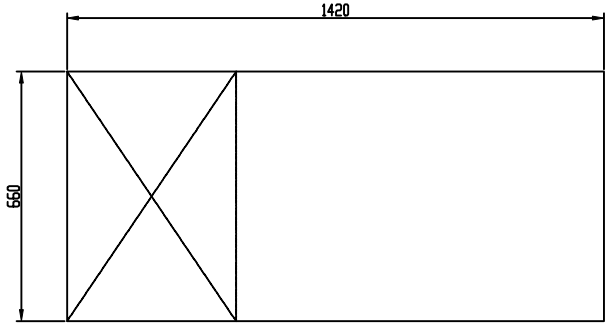

PLAIN
???

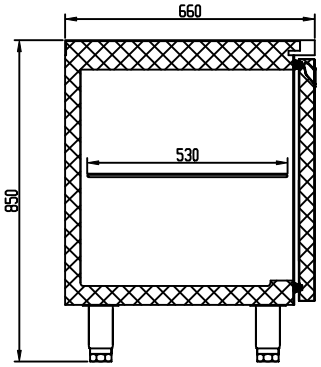

SECTION VIEW
?????

M-PW6T2H

??		
?	???	????304#??? ???????
?	???	304#2B
	????	??????35????????
	????	????65?
	????	-2/+4?
	????	??
	???	????????
	???	R134a
	??	/
	??	??220V 50HZ 1PHASE
	????	??10A?????
??		?1000mm? ±1mm
		?2000mm? ±2mm

??????????:

??:

Project No : ????:	Drawn: ??	???	
	Date: ??	9/4/2018	
Project: ????:	Units: ??	mm	
Title: ????: ??????	Qty ??	1	
	Checked ??	??	
Drawing No: ????:	Approved ??	??	

?:?????????????,??????!!!

Alteration By	Date	DESCRIPTION
	/	/
??	??	????