SPARE PARTS LIST

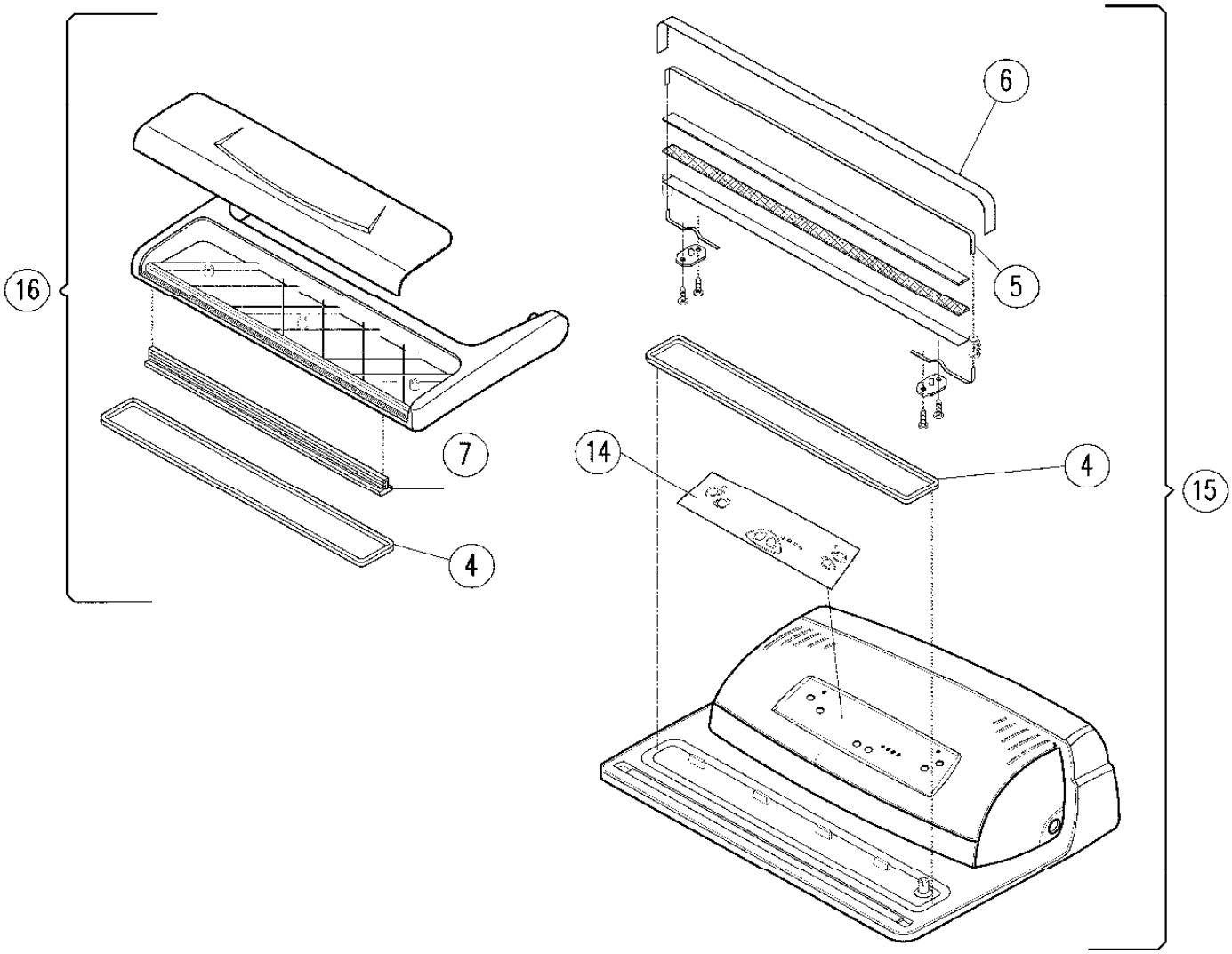

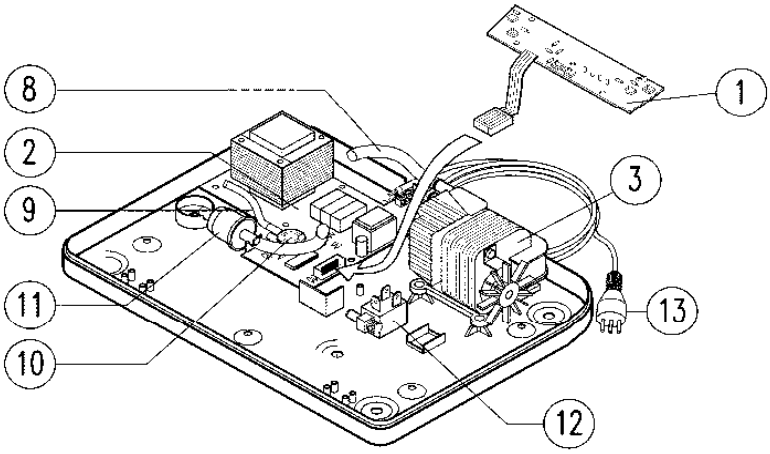

1803